World Dairy Expo

Display Rules and Regulations

Supplement to Commercial Exhibitor Manual

(Revised December 2012)

This is a guide for use by all World Dairy Expo exhibitors. Written exceptions may be granted by World Dairy Expo on a one-year, case-by-case basis. Please call or email with questions or send a sketch of your booth for review by September 1.

These guidelines have been adapted by the World Dairy Expo Commercial Exhibitor Committee from the International Association of Exhibitions and Events (IAEE) Guidelines for Display Rules and Regulations. The IAEE guide is generally accepted as the official rule book for trade show displays around the world.

World Dairy Expo
3310 Latham Drive, Madison, WI 53713
Phone: 608-224-6455, Fax: 608-224-0300
Email: sorth@wdexpo.com, Website: www.worlddairyexpo.com

INDEX

General Booth Rules 2

Standard Booth Guidelines 3

Corner Booth Guidelines 3

Perimeter Wall Booth Guidelines 3

Peninsula Booth Guidelines 4

Island Booth Guidelines 4

Non-Profit Table Top Guidelines 4

Outdoor Trade Mall Booth Guidelines 4

Hanging Signs & Graphics 5

Towers & Trusses 5

Demonstrations 6

Multi-Story Booths..... 6

Other Important Considerations 6

Top Ten Items To Remember ..... Back Cover

Note: All measurements are English

English/Metric	Metric/English
1 ft. = .3 m	1 m = 3.28 ft.
1 in. = 2.54 cm	1 cm = .39 in.

General Booth Rules

Aisle Use
Aisles are to remain completely free of obstructions and not put to commercial use in any way by any exhibitor. No activity can be conducted outside of contracted exhibit space, including handouts, solicitations, presentations, surveys or mascots. Exhibitors may not conduct any kind of activity that leads to congestion of aisle traffic.

Audio-Video/Music/Loud Demonstrations
World Dairy Expo management reserves the right to limit or restrict sounds from any source that interfere with activities in neighboring exhibits. In general, a neighbor should not be able to hear your sounds from their booth. All TVs, videos and demonstrations are subject to Expo's three-foot set-back rule.

Balloons
Helium balloons may be used as booth decorations if securely fastened, but balloon distribution is prohibited.

Fans/Misters
Indoor fan demonstrations require approval and are subject to regulation. Misting fans are not allowed to operate indoors. Outdoor exhibits using misting fans must take care to ensure that neighboring exhibits remain dry.

Food/Beverages
All food and beverage samples or giveaways must be approved by Expo and Centerplate, the AEC's Official Caterer. No food may be sold on the grounds without being listed specifically in the exhibitor contract. Alcohol may not be sold or distributed from booths. Any exhibitor distributing food (sales, samples or giveaways) must comply with all Dane County Public Health regulations and may require licensing.

Press Conferences/Media Events
Exhibitor press conferences and media events may not be held within booth space in any exhibit space or public area anywhere on the grounds. Meeting rooms on the grounds are available to rent for such events.

Signage
All signs must be professional in nature; handwritten signs are not permitted. See page 5 for hanging sign rules.

Line of Sight
All exhibitors are entitled to a reasonable line of sight which varies by booth size and location. Generally, nothing indoors should be over four feet (4') tall in the three feet (3') closest to the aisle. Please see the descriptions in this manual for your booth type.

Staffing
Booths must be staffed during all show hours, 9 a.m. to 5 p.m. Tuesday through Saturday (except International Lounge and Non-Profit Table Top (tt) displays. Booths left unattended for long periods of time will be considered abandoned and removed at the exhibitor's expense.

Stickers/Adhesive Materials
Use and distribution of adhesive materials of any type are prohibited by the facility. Bumper stickers, promotional stickers – all types of stickers – are prohibited. Please do not use or distribute them in any way at the show. Because of the costs involved in removing stickers from the floors, walls, etc., any company found to be distributing stickers will: (A) be fined $1,000 for each sticker that needs to be removed from a facility surface and (B) will lose booth priority for the following year. Please be sure that all staff working the show are aware of this policy.

Banner Stands/Roll-Up Banners
Banner stands and roll-up banners are subject to the same height and line-of-sight requirements as all other booth elements. A 6' banner stand cannot be placed on top of a 3' tall table if your height limit is 8'. Banner stands are also subject to the 3' rule and may not be placed in the three feet closest to any aisle.

Standard Booth

Standard Booths have only one side exposed to an aisle and are generally arranged in a series along a straight line. They are also called "linear" or "in-line" booths.

Dimensions

Most Standard Booths at World Dairy Expo are 10' x 10' in the Arena, New Holland Trade Center and Exhibition Hall. Most Coliseum booths are 10' wide by 8' deep. There are a few exceptions to this rule, and such exceptions would be specified on the booth contract. Due to the circular nature of the Coliseum, all dimensions given are approximate. The maximum height limitation in all cases for Standard Booths is 8 feet.

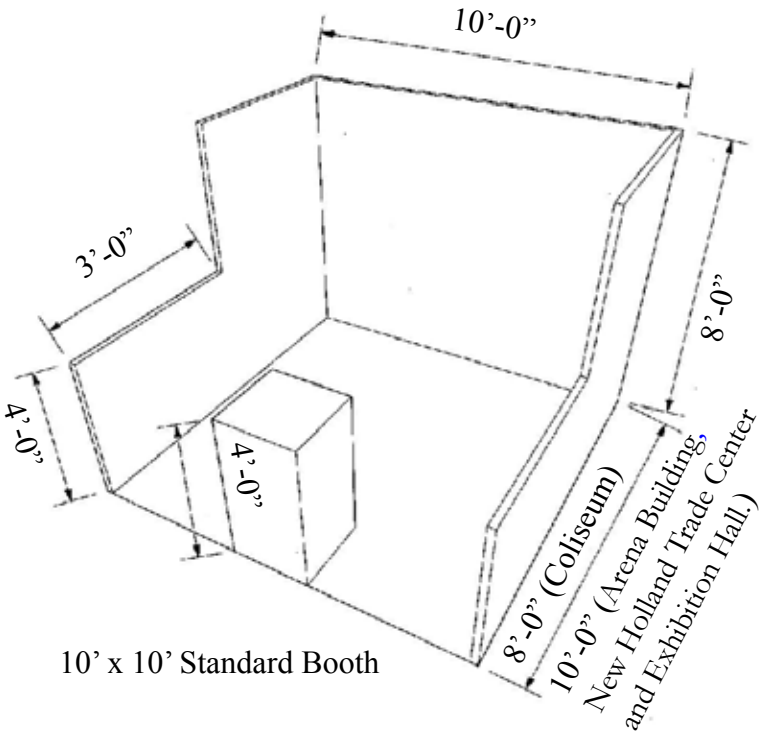

10' x 10' Standard Booth

Use of Space

Regardless of the number of Standard Booths utilized, (e.g. 10' x 20', 10' x 30', 10' x 40' etc.) display materials should be arranged in such a manner so as to not obstruct sight lines of neighboring exhibitors. The maximum height of eight feet (8') is allowed only in the rear of the booth space, with a four foot (4') height restriction imposed on all materials in the three feet closest to the aisle. Note: When three or more Standard Booths are used in combination as a single exhibit space, the four foot (4') height limitation is applied only to that portion of exhibit space which is within ten feet (10') of an adjoining booth.

Corner Booth

A Corner Booth is a Standard Booth exposed to aisles on two sides. All other guidelines for Standard Booths apply.

Perimeter Booth

A Perimeter Booth is a Standard Booth that backs up to a wall rather than to another exhibit. Perimeter Booths are those numbered 400-418, 500-518, 1101-1118, 4201-4217, 4301-4322.

Dimensions and Use of Space

The same guidelines for Standard Booths apply to Perimeter Booths except that the typical maximum backwall height is twelve feet (12') in those areas.

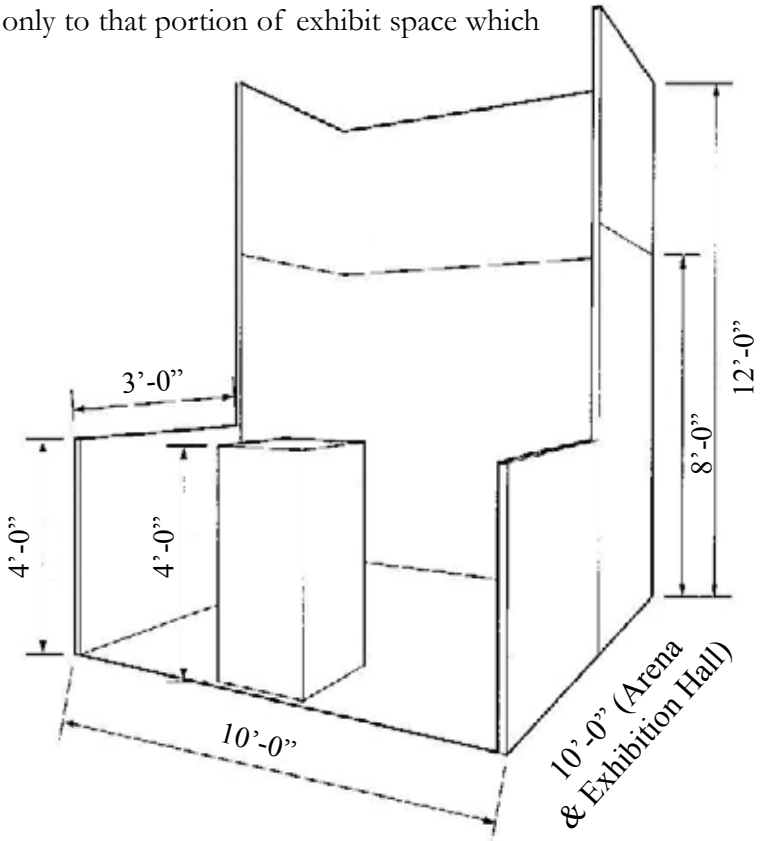

10' x 10' Perimeter Booth

Peninsula Booth

Peninsula Booths are any configuration of four or more booths exposed to aisles on three sides.

Dimensions

Peninsula Booths at World Dairy Expo are 20' x 20' or larger. When a Peninsula Booth backs up to two Standard Booths, the backwall is restricted to four feet (4') high within the three feet (3') closest to each aisle, in the back five feet (5') of the booth permitting adequate line of sight for the adjoining booths. The rest of the backwall can be no higher than sixteen feet (16'). Any portion of the backwall that extends beyond the eight foot (8') curtain must be finished (no exposed framing or structure) and may not carry any ad copy on the back side.

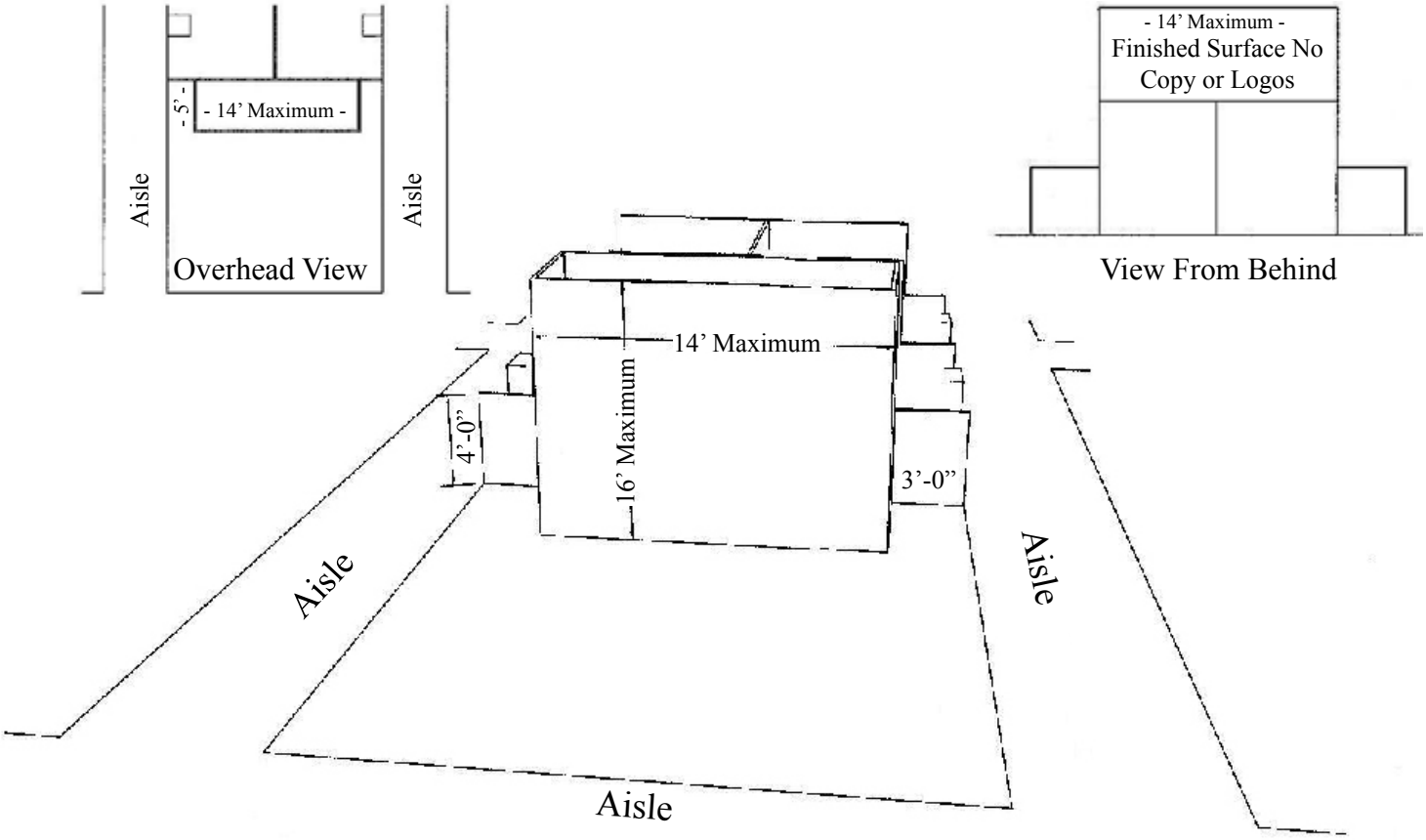

Island Booth/Split Island Booth

An Island Booth is exposed to aisles on all four sides. A Split Island Booth is a Peninsula Booth which shares a common backwall with another Peninsula Booth. In both cases, the entire cubic content of the booth may be used up to sixteen feet (16'). Any portion of the backwall that extends beyond the eight foot (8') curtain must be finished (no exposed framing or structure) and may not carry any ad copy on the back side.

Non-Profit Table Top Display

Non-Profit Table Top displays are limited to a total size of 8' x 3' and are provided with a skirted 6' table. Display must be positioned against the wall.

Outdoor Trade Mall Booth

Outdoor Trade Mall booths are any booths not inside a building or under any type of cover. These booths have no height limits or product placement restrictions.

Hanging Signs and Graphics

Whether suspended from above or supported from below, all booth elements must comply with all ordinary use-of-space requirements. The highest point of any sign in any booth should not exceed the maximum allowable height for that type of booth. Hanging Signs and Graphics should be set back a minimum of five feet (5') from adjacent booths and aisles.

Hanging Signs and Graphics are not allowed in any area of the Coliseum, Arena Building or New Holland Trade Center. Companies wishing to hang anything from the ceiling above their booth must submit a "Hanging Sign Form" to the Expo office by September 1.

Towers and Trusses

A Tower is a freestanding exhibit component separate from the main exhibit fixture. The height restriction is the same as that which applies to the appropriate exhibit configuration being used. Towers in excess of eight feet (8') should have drawings available for inspection.

Towers are permitted to a maximum height and depth corresponding to the height and depth for their exhibit. For example, towers that are part of in-line booth exhibit will not exceed eight feet (8'). If placed within three feet (3') of booth closest to aisle, tower must be four feet (4') or less. This is waived if tower is at least five feet (5') from any adjacent booth. Other placement may be approved for larger booths.

Trusses are similar to Towers, but are treated slightly differently since they typically do not completely block sight lines. Variance may be granted on a case-by-case basis to place Trusses tight against an adjoining booth so long as signage or graphics do not interfere with line of sight requirements. Plans must be submitted and variance must be requested by September 1.

Demonstrations

As a matter of safety and courtesy to others, exhibitors should conduct sales presentations and product demonstrations in a manner which assures all exhibitor personnel and attendees are within the contracted exhibit space and not encroaching on the aisle or neighboring exhibits. It is the responsibility of each exhibitor to arrange displays, product presentation and demonstration area to ensure compliance.

Special caution should be taken when demonstrating machinery or equipment that has moving parts or any product that is potentially dangerous. Exhibitors should establish a minimum set-back of three feet (3') and/or install hazard barriers as necessary to prevent accidental injury to spectators. Demonstrations involving sound need to be limited in frequency and are at the discretion of show management. Generally, a neighbor across the aisle should not be able to hear your demonstration.

Multi-Story Exhibit

A Multi-Story Exhibit is a booth where the display fixtures exceed twelve feet (12'), including Double-Decker and Triple-Decker Booths. A Multi-Storied Exhibit requires prior approval by World Dairy Expo, the Alliant Energy Center, and all other relevant agencies because it is deemed to be a "structure" for building purposes. The city building department generally needs to issue a building permit based on an application and drawings prepared and submitted by a licensed architect or engineer. Exhibitors should obtain local building regulations early on to ensure that all time constraints are met. Expo staff can work with you to help expedite this process.

Other Important Considerations

Lighting

Exhibitors should adhere to the following suggested minimum guidelines when determining booth lighting:

- No lighting, fixtures, lighting trusses or overhead lighting are allowed outside the boundaries of the exhibit space. Exhibitors intending to use hanging lighting systems should submit a drawing to the Expo office prior to September 1.
- Lighting should be directed to the inner confines of the booth space. Lighting should not project onto other exhibits or show aisles.
- Lighting which is potentially harmful, such as lasers or ultraviolet lighting, must be approved in writing by September 1.
- Lighting that spins, rotates, pulses and other specialized lighting effects should be in good taste and not interfere with neighboring exhibitors or otherwise detract from the general atmosphere of the event.

Booth Construction

All indoor booth displays must be constructed so as to appear "finished" on all sides that may be visible, including from all adjoining booths. For example, if the framework structure of a pop-up booth is visible from an adjoining booth, that framework will need to be covered so as to not detract from the appearance of the adjoining booth. All exhibit displays should be designed and erected in a manner that will withstand normal contact or vibration caused by neighboring exhibitors, hall laborers or installation/dismantling equipment such as forklifts. Displays should also be able to withstand moderate wind effects that may occur in the exhibit area when freight doors are open.

Product Containment

All hay, straw, feed products and other similar items must be fully contained and kept within booth space. For example, all hay bales used as part of a display must be wrapped in plastic or enclosed within a container to keep loose materials off the floor.

Canopies & Ceilings

Canopies, including ceilings, umbrellas and canopy frames, can be either decorative or functional (such as to shade computer monitors from ambient light or for hanging products). Canopies for Standard or Perimeter Booths should comply with line of sight requirements. The base of the Canopy should not be lower than seven feet (7') from the floor within five feet (5') of any aisle. Canopy supports should be no wider than three inches (3"). This applies to any booth configuration that has a sight line restriction, such as a Standard Booth.

Specific Move-In Times

Some exhibitors with large displays may be required to complete booth installation during fixed times. Any exhibitor impacted by fixed move-in times will be notified at least 30 days in advance of the show.

Oversized Equipment

Due of the nature of the dairy industry, exhibitors at Expo sometimes have products that exceed the display height regulations. This is usually acceptable, so long as there is no signage or logo on the portion of the equipment extending beyond the height restriction for that type of booth. Equipment too large to fit within the boundaries of the booth space, or that does not comply with the line of sight regulations (page 3-4) for that type of booth, will not be allowed.

Live Animals

Live animals are not allowed within any commercial exhibit area without written approval.

Top Ten Items To Remember

Arrival
Set-up hours are strict! Exhibits must be in place and completely set up by 5 p.m. Monday. All booths are inspected Monday evening, and any unfilled spaces are resold. Set up early to avoid the rush.

Tear Down
Absolutely no part of your exhibit (including supplies and materials) may be dismantled, packed or removed before 5 p.m. on Saturday. See the Exhibitor Manual for exact details on exhibitor release for your area.

Stickers/Tape/Adhesives
Distribution of promotional stickers of any kind is strictly prohibited. Using adhesive stickers, spray glue, tape, staples or glue on any building surface (floor, wall, etc.) is a violation of facility policy.

Aisle Use
Aisles are to remain completely free of obstructions and not put to commercial use in any way. No activity can be conducted outside of contracted exhibit space, including handouts, solicitations, presentations or mascots.

Height Restrictions
No booth element may be above eight feet (8') high in any indoor Standard Booth. Exhibitors exceeding these limits without prior written permission will be required to revise the booth to fit guidelines before the show opens.

Blocking Neighbors
There can be nothing higher than four feet (4') within the three feet (3') closest to the aisles in any indoor space without written permission. This will be strictly enforced.

Strolling/Solicitation
Permission is never given to solicit attendees or exhibitors at Expo outside of paid booth space. Any attempt to solicit outside of paid exhibit space is a violation of county ordinance and will be prosecuted. This includes aisles, bathrooms, parking lots, barns and all other common areas. Please report any exhibitor (or non-exhibitor) soliciting outside of their booth to show management immediately.

On-Site Registration
Registration packets need to be picked up at the show before 5 p.m. on Monday to receive your complimentary passes. No refunds are given. Please be sure all staff are aware of this policy.

Passes
If you need your passes mailed prior to the show, contact the WDE office by September 1.

Hanging Signs and Banners
If you wish to hang a sign as part of your booth in the Exhibition Hall, you must submit a "Hanging Sign Form" to the Expo office by September 1. The facility will not hang signs without prior approval. Hanging signs are not permitted in the Coliseum, New Holland Trade Center or Arena Building.

Violation of World Dairy Expo's Exhibit Rules will result in loss of priority for space, probation or being banned from future shows.